S650/T3000/WX1000 无线数字仪表

S650/T3000/WX1000 wireless digital instrument

使用说明书

Manual

Tel：400 000 1825　　Web：www.chnaf.com

Solution Instruments Co.,Ltd.

版本号：S650/T3000/WX1000-2012-05

S650/T3000 目录

一 概述……2

二 主要技术参数与功能…… …… ……3

三．结构尺寸图…… ……4

四．使用操作方法…… ……5

4.1 仪表结构示意图…… ……5

4.2 仪表按键功能介绍……6

4.2.1 检测状态下的功能……6

4.2.2 设置状态下的功能……6

4.3 仪表设置操作方法…… ……7

4.3.1 采集速度设置……7

4.3.2 通讯参数设置……7

4.3.3 测量介质比重设置（测量液位适用）

五．安装及使用注意事项 ……8

六．常见故障处理…… ……11

七．运输及贮存……12

八．技术服务……13

九．订货须知……13

十．开箱检查……13

WX1000 目录

一 概述……14

二 主要技术参数…… ……14

三．电气接线图及设置…… …15

四．通讯协议……17

五 运输及贮存……20

六 技术服务……20

七 订货须知……20

八开箱检查…… 20

一、 概述

S650 无线数字压力表

T3000 无线数字温度表

S650/T3000 无线数字仪表是我公司最新研制生产的高精度智能无线测量仪表。该仪表表主要由传感器和信号处理电路组成。传感器采用进口传感器，性能优越，具有精度高、抗腐蚀、抗冲击、抗震动、高稳定性等优点；信号处理电路采用最新超低功耗处理器和信号处理芯片及电源管理芯片组成，采用大容量高性能锂电池供电，无需外电源供电。该仪表外观精致、小巧、美观，使用操作简单。

S650/T3000 无线数字仪表可以广泛的使用在：油田采油、回注及污水处理、石油勘探、钻井、车载压力测量、天然气管道、石油管道、热电厂高温介质压力测量、铁路列车液压称重、煤气管道检漏、各类实验室。

产品主要特点：

* 测量精度高
* 采集速度可设置
* 抗电磁和射频干扰技术
* 信号全隔离技术
* 零点自稳技术
* 温度补偿技术

* 稳定的通讯技术，一个接收终端支持 50 台 S650/T3000 无线数字仪表通讯

* 超级电源管理技术使电池寿命可达 1～2 年

二、主要技术参数及功能、

1、 A、压力测量范围：

表压：-100kPa ~ 0 ~ 1kPa~ 260MPa

差压：0~500Pa~3.5MPa

绝压：0~10kPa~60MPa

B、过载压力：1.5~3 倍的量程，视测量范围而定

C、精度：0.1 级及以下

2、 A、温度测量范围：

热电偶：E：0~750℃ K：0~1200℃ S：0~1300℃

B：0~1600℃

热电阻：PT100：-200~500℃

B、插入深度：50mm~2500mm（根据客户需求定做）

C、精度：0.2 级及以下

3．输出信号：ACI 无线信号

4．精度等级：0.1 级及以下

5．工作频段：430~470MHz

6．传输距离：300 米或 800 米

7．内置电源：3.6V 高能锂电池

8．介质温度：-40℃～85 ℃； -65℃～200 ℃（宽温）

9．工作环境：温度：-30℃～60 ℃ ；湿度：＜90%

参比温度：20℃±2℃

10．防爆级别：ExdIIBT4

11．过程接口：M20×1.5（外螺纹）

三、结构尺寸图

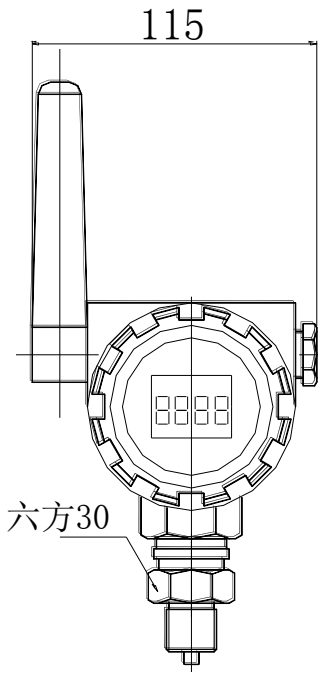

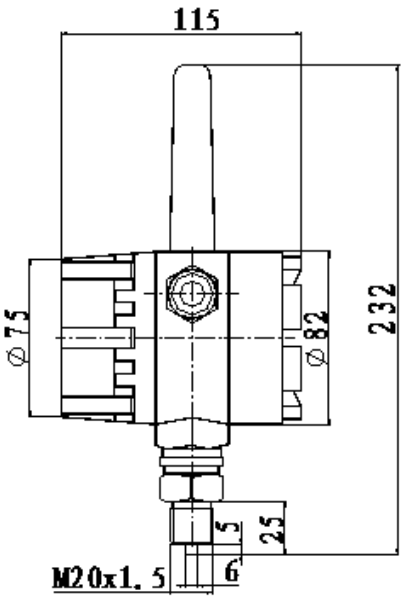

正面图　　压力表　　侧面图

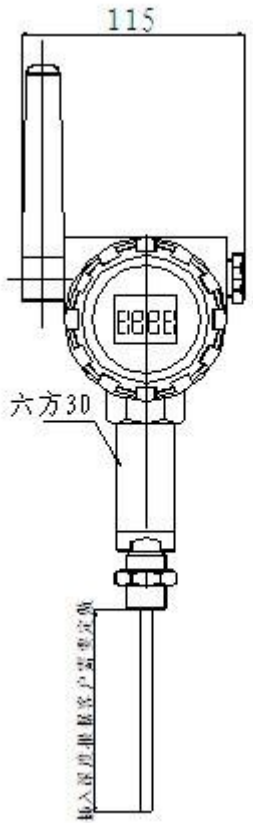

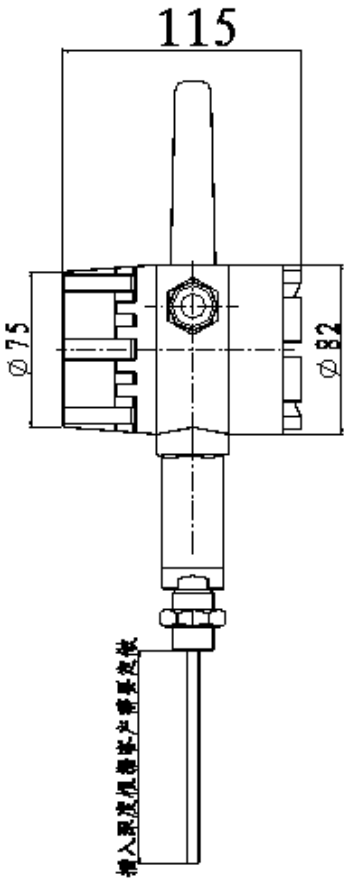

正面图　　温度表　　侧面图

四、使用操作方法

4.1 仪表结构示意图

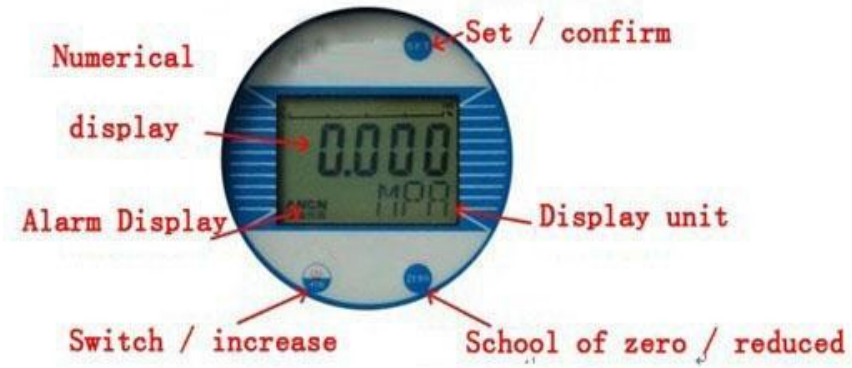

4.2 仪表按键功能介绍：

4.2.1 检测状态下的功能：

“开关（ADD）”键：在检测状态下有开关机功能。

按住此键 1s 内显示“OFF” ，仪表进入关机状态；

再次按下此键显示“- ON-”，仪表显示通讯地址后，自动进入测量状态。

“校零（ZERO）”键：零位修正键，当仪表发生零位漂移时通过此键可以自动修正零位。

按住此键 1s 内显示“-00-”仪表进行零点校准；

压力表修正方法：正常时 1s 内自动退出并保存当前压力为大气压和显示“0.00” ；

如果压力与大气压相差较大或仪表故障则显示“ERRO”，然后放弃保存并在 1s 内进入压力测量状态。

注：绝压表需在绝对真空状态下校零方可有效。

温度表修正方法：正常时 1s 内自动退出并保存当前温度值

为零度和显示“0.00” ； 如果仪表显示温度与实际温度相差较大或仪表故障时则显示“ERRO”，

然后放弃保存并在 1s 内进入温度测量状态。

注：仪表校零功能必须在零度（冰水混合物）的状态下校零方可有效。

4.2.2 设置状态下的功能：

“设置（SET）”键：按此键 1 秒内仪表进入设置状态。在设置状按此键有确认保存的功能；

“开关（ADD）”键：在设置状态和输入密码时，该键有数据增加的功能；

“校零（ZERO）”键：设置状态和输入密码时，按该键将显示值左移一位，末尾补零。

4.3 仪表设置操作方法：

（注意：非专业仪表操作人员不得进行设置操作，以免导致仪表的错误运行）

4.3.1 与采集速度相关的设置 ：

1. 进入采集时间间隔设置（密码通常为:“1200”）

a. 按“**设置**”键，仪表显示“-KEY-”

b.按“**开关**”键 1 次（加 1），显示“**0001**”再按“**校零**”键向左移动一位，此时显示:“**0010**”

c. 同 b 步，使显示“1200”

d. 按“**设置**”键，仪表进入采集时间设置

设置内容如下：

1：仪表显示“**SPED**” 此时设置仪表的采集速度，按“**开关**”键为（0-20）循环增加，显示的为 N **秒/次**。

2：设置好后按“**设置**”键仪表显示“**ANCN**”，后显示“**55**”，此参数不修改，

3：按“**设置**”键保存并进入检测状态。

4.3.2 与通讯相关的设置 ：

1. 进入通讯参数设置（密码通常为：“0485”）

a. 按“**设置**”键，仪表显示“-KEY-”

b.按“**开关**”键 4 次，显示“**0004**”，再按“**校零**”键向左移动一位，此时显示：“**0040**”

c. 同 b 步，使显示“**0485**”

d. 按“**设置**”键，仪表进入通讯设置模式

设置内容如下：

1：仪表显示“**BPS**”：此时设置仪表的通讯波特率，按“**开关**”键将选择的波特率显示出来；可以选择的参数有：**19200**（**默认**）、**9600**、**4800**、**2400**。

2：仪表显示：“**Addr**”：此时设置仪表的通讯地址，按“**开关**”键将通讯的地址显示出来；地址从 **00~49**（**默认为 1**），同一接收终端中最多连接 50 台无线仪表并使用同样的波特率。

3：设置好后按“**设置**”键保存并进入检测状态。

4.3.3 与测量介质比重的系数相关的设置 （测量液位适用）

1. 进入测量介质比重的系数设置（密码通常为：“1250”）

a. 按“**设置**”键，仪表显示“-KEY-”

b.按“**开关**”键 1 次（加 1），显示“**0001**”再按“**校零**”键向左移动一位，此时显示：“**0010**”

c. 同 b 步，使显示“1250”

d. 按“**设置**”键，仪表进入介质比重的系数设置

设置内容如下：

1：仪表显示“**COEF**”后显示“**1. 000**”，此参数水的比重的系数。

2：按“开关”键为增加，“校零”键为减小，直到显示为所需要的比重值停止即可。

2：设置好后按“**设置**”键保存并进入检测状态。

五、安装及使用注意事项

5.1 安装前检查

压力： a. 被测点的压力是否会超过仪表的测量范围；

b. 被测点的压力是否有瞬间冲击；

c. 所测介质是否有高温（小于 85℃）；

d. 所测介质是否与仪表结构材料相适应；

e. 所测介质是否会堵塞仪表的引压孔；

f. 测量液位的罐体是否为密封。

温度： a. 被测点的温度是否会超过仪表的测量范围；

b. 所测介质是否与仪表结构材料相适应；

5.2 安装方法

压力： a. 一般情况下，仪表应向上垂直于水平方向安装，以便于观察；

b. 通用标准的压力接口为 M20x1.5 外螺纹，安装时应加装紫铜或聚四氟等密封垫片加以密封；

c. 如果测量液位的罐体为密封的，应当在罐体上方开通气孔，以避免罐体内压缩的气体造成仪表读数与实际液位不符，如涉及到安全或其它方面不能开通气孔的，应当从新选用其它方式的液位仪表。

d. 仪表可以直接安装在测量管道的法兰接口上，为便于安装和維修，法兰接头与管道之间应加装接截止阀和放空阀。（见下图）

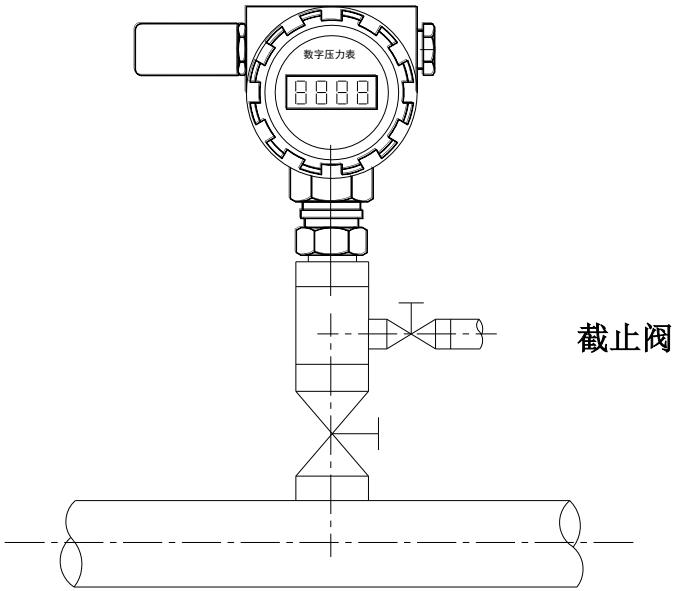

管道安装

温度：a. 一般情况下，仪表应向上垂直于水平方向安装，以便于观察；

b. 通用标准的温度接口为 M20x1.5 外螺纹,安装时应加装紫铜或聚四氟等密封垫片加以密封；

c. 仪表可以直接安装在测量管道的接口上，为便于安装和維修，管道内应安装保护套管，建议温度探头应该安装至被测体中心。（见图）

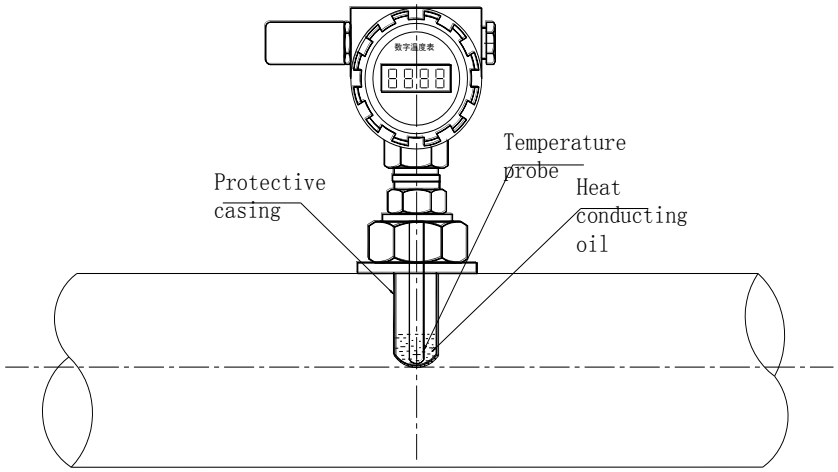

管道安装

5.3 注意事项

压力：a. 不要用锐器或硬物捅引压孔，也不要用手等按压膜片，以免损坏摸片或造成膜片永久形变。

b. 对于被测点压力有瞬间冲击的情况须加装压力缓冲装置，以避免瞬间脉冲高压直接冲击压力传

感器，导致传感器损坏。

c. 环境温度超出产品标准时，应采取现场防护措施，以防损坏液晶显示器。

d. 在安装仪表时，需将截止阀关闭，同时打开放空阀，以免因为憋压而引起的压力过高损坏仪表的传感器。

e. 如果介质温度≥80℃≤100℃时，应加装冷疑管。

f. 安装差压表时，请注意检查高压端和低压端，以免损坏传感器。

温度：a. 不要用硬物敲击温度传感器探头，以免激烈震动损坏温度传感器。

b. 环境温度超出产品标准时，应采取现场防护措施，以防损坏液晶显示器。

六、常见故障处理

A、无线压力仪表常见故障处理：

故障现象	产生的原因	解决方法
空压时仪表显示不为零	安装位置有变化，即非轴向垂直向上安装。	按当时安装位置对仪表进行校零
	测量介质的杂物堵塞压力测量孔	用水或其它有机溶剂清洗
	测量介质及环境温度超出产品测量范围	防止在仪表使用温度范围之外工作
	测量介质中含有硬质杂物损伤测量膜片， 或人为捅伤测量膜片	返厂修理
	安装过程出现憋压现象，造成压力膜片变形	先进行校零操作，如不能校正需返

		厂维修
	仪表零点产生漂移	进行校零操作
有压时出现LL、HH、零或仪表显示压力值不正确	测量介质的杂物堵塞压力测量孔	用水或其它有机溶剂清洗
	测量介质中含有硬质杂物损伤测量膜片， 或人为捅伤测量膜片	返厂修理
	压力源有瞬时冲击	加装压力阻尼器
	压力源瞬时冲击导致压力传感器损坏	返厂修理
	压力超出仪表量程范围	防止压力超出仪表量程范围 或重新选用合适量程的仪表
	压力超出仪表量程最大 过压导致压力传感器损坏	返厂修理

	电磁干扰过大	安装在电磁干扰小的环境中
无显示	电池没电	更换同型号电池
	液晶屏损坏	返厂维修
仪表不通讯	仪表通讯参数设置错误	参照说明书5.3.2章节　正确设置通讯参数
	仪表通讯模块出现故障	返厂修理
	仪表电池电量不足	更换同型号电池
	仪表通讯距离超过规定距离或障碍物过多	将仪表安装在规定的范围内
	仪表天线出现故障	返厂维修

B、无线温度仪表常见故障处理：

故障现象	产生的原因	解决方法
常温下显示 LL、HH 或仪表显示温度值不正确	温度传感器损坏或未标定	返厂修理
	电磁干扰过大	安装在电磁干扰小的环境中
无显示	电池没电	返厂更换电池
	液晶屏损坏	返厂维修
仪表不通讯	仪表通讯参数设置错误	参照说明书 5.3.2 章节 正确设置通讯参数
	仪表通讯模块出现故障	返厂修理
	仪表电池电量不足	更换同型号电池
	仪表通讯距离超过规定距离或障碍物过多	将仪表安装在规定的范围内
	仪表天线出现故障	返厂维修

七、运输及贮存

1. 该产品与合格证、使用说明书、检验报告等附件同装于一个包装箱内，在搬运及运输过程中应当小心轻放，严禁强烈的碰撞。
2. 该产品应存放在- 40℃~ +80℃，相对湿度不大于 85%，通风，干燥，无腐蚀性气体的库房中。

八、技术服务

a. 因产品本身质量问题，使数字压力表不能正常工作时，我公司一年内负责维修或更换。

b. 为了确保用户的维修和保养，我公司有偿为用户提供各种配件和数字压力表软硬件升级服务。

九、订货须知

a. 订货时，用户需要提供详细技术参数，如压力测量范围、精度要求、输出信号种类和特殊要求等等，以便选择更合适自己要求的数字仪表。

b. 详细选型方式请查阅公司最新选型样本或登陆公司网站进行选型。

十、开箱检查

收到产品后请及时进行检查，检查项目有：外部包装是否完整，依据随机附带的装箱单核对箱内物品数量、仪表型号、规格以及随机配件，检查仪表及配件的完整性。

收到产品后如发现任何异常或不良，请于 3 日内以书面形式通知本公司，我方将给予补发或更换，过时将视为所发物品合格无误。

WX1000 无线传感器

一、概述

WX1000 无线传感器网络是我公司自主研发的无线传感器网络系统，可完全代替传统的仪表数据采集系统。该系统由 WX1000 无线通讯终端和 WX1000、WX1000 系列无线数字压力仪表、温度仪表组成；使用完全免费的 ISM 频段进行数据传输，仪表自带电池，与通讯终端之间不需要任何连线。通讯终端与工控机采用 RS485 或 RS232 连接，采用标准 MODBUS-RTU 通讯规约，支持组态王、Intouch、FIX 等工控软件；能与西门子、施奈德、ABB 等多个著名品牌的设备及系统之间实现数据通信；目前可实现在 300 米或 800 米半径内 50 台无线仪表的稳定采集。

该无线传感器网络的应用前景非常广阔，目前已广泛应用于军事、工业控制、医疗卫生、环境监测、智能家居、建筑物状态检测等领域。**主要特点：**

* 采用无线传输，无需现场布线，省去普通变送器需要现场布线的麻烦，既节省了人力，又节省了成本；
* 无线传感器网络仪表采用大容量高性能锂电池供电，无需电源供电，特别适合于无法提供电源的野外使用；

* 无线传感器仪表数量可以在一个范围内任意扩展，调整方便；
* 采集精度高、传输稳定、网络维护量小；
* 星形拓扑结构总线，传感器之间互不影响，维护简单方便；
* 该通讯终端和无线数字仪表都采取防雷和防爆设计，所以适合各种恶劣气候环境和天然气集气站的数据采集和通讯；

二·主要技术参数

工作频段： 315MHz～2.4GHz ， GFSK 调频
发射功率： 10 DBM
通讯接口： RS232、RS485（MODBUS-RTU）、TCP/IP 等
信号输出： 可选 2 路隔离的 4-20mA 或 1-5V 输出（需 24v 供电）
通讯速率： 1200、2400、4800、9600、19200 等
输入电源： 7~24VDC
功　　率： ＜ 3W
工作环境： 温度：-30℃～60 ℃ ；湿度：＜90%

三·电气接线图及设置

RTU 内部接线图：请严格按照图示接线。

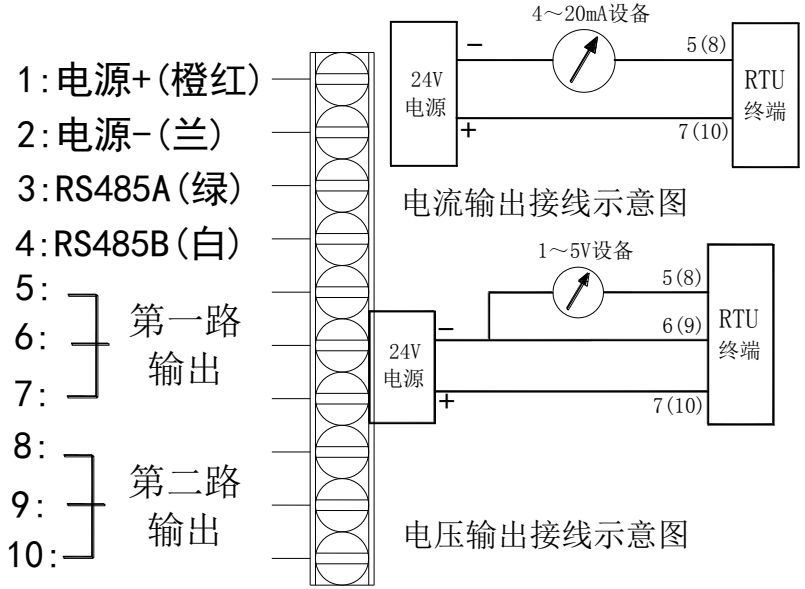

1、2 脚为 RTU 供电电源（24VDC）　　3、4 脚为 RTU 通讯接口（RS485）

两线制 4~20mA 电流输出时：第一路 5 脚为 4~20mA 输出，6

脚为空，7 脚为 24V 电源正

第二路 7 脚为 4~20mA 输出， 8 脚为空，9 脚为 24V 电源正三线制 1~5V 电压输出时：第一路 5 脚为 1~5V 输出，6 脚为 24V 电源负 7 脚为 24V 电源正

第二路 8 脚为 1~5V 输出，9 脚为 24V 电源负 10 脚为 24V 电源正

注： 4～20mA 电流输出或 1~5V 电压输出只可选一，且为定制型产品，需在选型时提出

RTU 地址设置：（默认为 1，既 0000 0001，如下图所示）

RTU地址设置：（8位二进制码）

地址范围：0~255

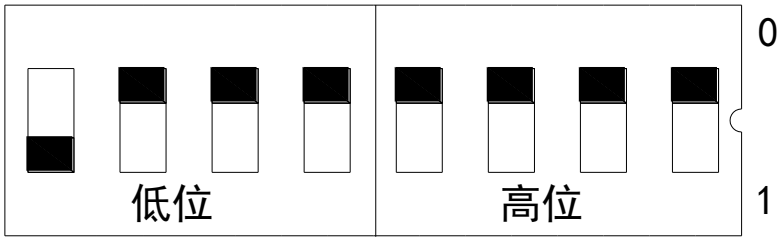

1 0 0 0 0 0 0 0

默认地址为1（00000001）

注：RTU 地址设置采用 8 位二进制代码表示，地址范围为 0~255，拨码开关拨至上方为 1，下方为 0，前 4 位为低位，后 4 位为高位，如：现要将 RTU 地址设置为 3，转换为 8 位二进制代码为：0000 0011，则需要将低位的前两个拨码开关拨至上方，其余的拨至下方即可。

RTU 波特率设置：（默认为 9600bps，既 10，如下

图所示）

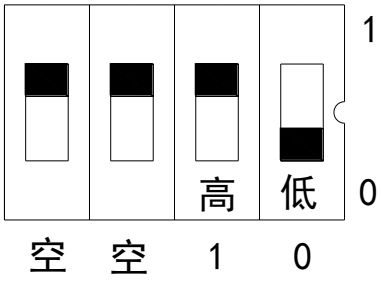

注：RTU 波特率设置采用 2 位二进制代码表示，有两位未用为空，可设置的波特率及二进制代码：2400bps（00）、4800bps（01）、9600bps（10）、19200bps（11），拨码开关拨至上方为 1，下方为 0，前 1 位为高位，后 1 位为低位，如：现要将 RTU 波特率设置为 4800bps，转换为 2 位二进制代码为：01，则需要将高位的拨码开关拨至下方，低位的拨码开关拨至上方即可。

注：无特殊情况下，RTU 设置保持默认状态！

四、通讯协议

1、Modbus 协议简介

ModBus 协议定义了一个控制器能认识使用的消息结构，而不管它们是通过
何种网络进行通信的，它制定了消息域的格局和内容的公共格式，描述了一个控
制器请求访问其它设备的过程，回应来自其它设备的请求，以及如何侦测并记录
错误信息。

通过此协议，控制器相互之间、控制器经由网络（例如以太网）和其它设备
之间可以完成信息和数据的交换与传送，使各种不同的公

司和厂家的可编程程序

控制器（PLC）、RTU、SCADA 系统、DCS 或与兼容 ModBus 协议的第三方

设备之间可以连成工业网络，构建各种复杂的监控系统，并利于系统的维护和扩

展，这个通讯协议已广泛被国内外电力行业及工控行业作为系统集成的一种通用

工业标准协议。

WX1000 系列 RTU 采用 ModBus-RTU 通讯规约，支持组态王、Intouch、FIX、

synall 等流行软件，能与 AB、西门子、施耐德、GE 等多个国际著名品牌的设备

及系统之间实现数据通信，适用于石油、化工、电力系统综合自动化，智能仪器

设备，工业自动化等领域，是构建、扩建 DCS 系统或制造智能工业参数采集设

备的理想功能部件。

2、WX1000-RTU 协议

WX1000 系列 RTU 实现 Modbus 通信协议时，遵循 Modbus 通信过程，采用了 MODBUS-RTU 协议的命令子集，使用读寄存器命令（03）。

① 数据传输方式：

异步 10 位——1 位起始位，8 位数据位，1 位停止位，无校验位。

② 数据传输速率：

19200bps，9600 bps，4800bps，2400bps。（缺省波特率为 9600bps，户可通过专用软件进行设置。）

③ 地址：

0～255(缺省为 1，用户可通过专用软件进行设置)。

④主机请求数据报文格式：

主机发送	字节数	发送的信息	备注
RTU 地址	1	XX	向地址为 XX 的从机(RTU)要数据
功能码	1	03	读取寄存器
起始地址	2	0000	起始地址为 0000
数据长度读取	2	00XX	XX 个数据（共 2XX 字节）
CRC 码	2	XXXX	由主机计算得到 CRC 码

主机向 1 号 RTU 请求数据的实际报文如下：

01H，03H，00H，00H，00H，32H，C4H，1FH

⑤WX000-RTU 响应要数命令报文格式：

从机响应	字节数	返回的信息	备注
从机地址	1	XX	来自地址为 XX 的从机
功能码	1	03	读取寄存器
数据长度	1	XX	XX 字节（2 倍数据个数）
寄存器数据 1	2	DAT1	1 号仪表数据内容
… … … …			
寄存器数据 N	2	DATN	N 号仪表数据内容
CRC 码	2	XXXX	由从机计算得到 CRC 码

通讯返回数据区解释

0x0000：第 1 路仪表高字节

0x0001：第 1 路仪表低字节

0x0002：第 2 路仪表高字节

0x0003：第 2 路仪表低字节

... ...

0x0062：第 50 路仪表高字节

0x0063：第 50 路仪表低字节

其它地址:仪表不返回

错误码解释：

1：返回： 7DH,00H（32000）仪表超量程上限。

2：返回： D6H,98H（-10600）仪表超量程下限。

3：返回： D5H,08H （-11000）仪表故障，但通讯畅通。

4：返回： D1H,20H（-12000）无此路仪表或通讯中断。

⑥错误校验码（CRC 校验）：

计算 CRC 码的步骤为：

- 预置 16 位寄存器为十六进制 FFFF（即全为 1）。称此寄存器为 CRC 寄存器；
- 把第一个 8 位数据与 16 位 CRC 寄存器的低位相异或，把结果放于 CRC 寄存器；
- 把寄存器的内容右移一位(朝低位)，用 0 填补最高位，检查最低位；
- 如果最低位为 0：重复第 3 步(再次移位)；如果最低位为 1：CRC 寄存器与多项式

A001（1010 0000 0000 0001）进行异或；

- 重复步骤 3 和 4，直到右移 8 次，这样整个 8 位数据全部进行了处理；
- 重复步骤 2 到步骤 5，进行下一个 8 位数据的处理；
- 最后得到的 CRC 寄存器即为 CRC 码

五、运输及贮存

1. 该产品与合格证、使用说明书、检验报告等附件同装于一个包装箱内，在搬运及运输过程中应当小心轻放，严禁强烈的碰撞。
2. 该产品应存放在- 40℃~ +80℃，相对湿度不大于 85%，通风，干燥，无腐蚀性气体的库房中。

六、技术服务

a. 因产品本身质量问题，使产品不能正常工作时，我公司一年内负责维修或更换。

b. 为了确保用户的维修和保养，我司有偿为用户提供各种配件及产品软硬件升级服务。

七、订货须知

a. 订货时，用户需要提供详细技术参数，以便选择更合适自己要求的数字仪表。

b. 详细选型方式请查阅公司最新选型样本或登陆公司网站进行选型。

八、开箱检查

收到产品后请及时进行检查，检查项目有：外部包装是否完整，依据随机附带的装箱单核对箱内物品数量、产品型号、规格以及随机配件，检查产品及配件的完整性。

收到产品后如发现任何异常或不良，请于 3 日内以书面形式通知本公司，我方将给予补发或更换，过时将视为所发物品合格无误。

S650/T3000 wireless digital instrument

catalogue

1 Contents I. Overview 22

2. Main technical parameters and functions 23

3. Structural dimensions 23

4.Using the methods of operation ... ... …. ... .24

4.1 meter schematic ... ...……. …… 24

4.2 meters KEY FUNCTIONS ... ... .24

4.2.1 Detection state functions 24

4.2.2 set state functions ... ... ……. ... …… 25

4.3 meters set methods of operation 25

4.3.1 acquisition speed settings 25

4.3.2 Communication parameters 25

4.3.3 measuring the proportion of medium settings (measuring liquid level applicable) ... …. …. 25

5. Installation and use precautions 26

6. Troubleshooting ... ... ……. 28

7.Transportation and storage 29

8. Technical services ... ... …. . .. .29

9.Order Information 29

10.Incoming Inspection 29

WX1000wireless communication terminal

Catalogue

1. Overview 33

2 Main technical parameters..... 34

3 the electrical wiring diagram and set 35

4 The communication protocol..... 37

5 Transportation and storage..... 39

6 Technical services.....40

7 Ordering Information.....40

8 The open-package inspection.....40

1. an overview of

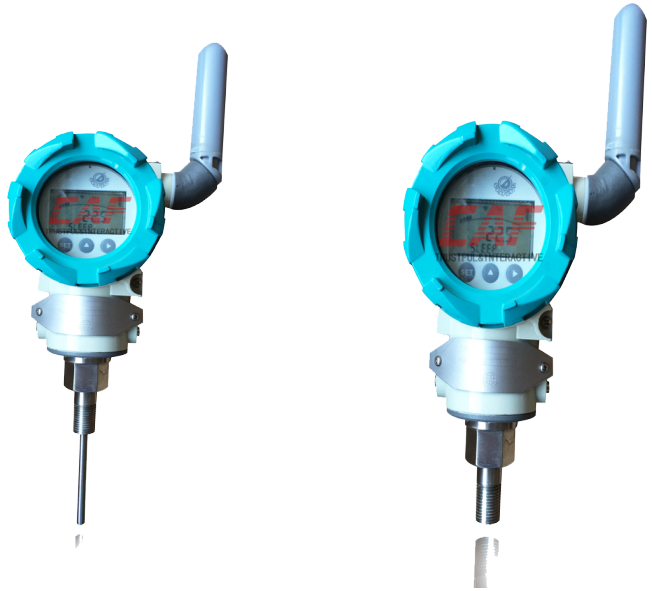

S650 wireless digital pressure gauge

T3000 wireless digital thermometer

S650/T3000 wireless digital instrument is our newly developed high-precision smart wireless instrumentation. The main instrument table by the sensor and signal processing circuit. Sensor imported sensor, superior performance, high accuracy, corrosion resistance, impT3000 resistance, vibration, high stability, etc.; signal processing circuit using the latest ultra-low power processor and signal processing chips and power management chips, using a large high-capacity lithium battery-powered, no external power supply. The instrument looks fine, small, beautiful, easy to use.

S650/T3000 wireless digital meter can be widely used in: oil extrT3000ion, reinjection, and sewage treatment, oil exploration, drilling, automotive pressure measurement, gas pipelines, oil pipelines, power plant high temperature medium pressure measurement, weight train hydraulic, gas pipelineleak, various types of laboratory.

Main features:

* High accuracy *

* acquisition speed can be set against electromagnetic and RF interference

* signal

* Zero full isolation from stability technology

* Temperature compensation

* stable communication technology, a receiving terminal support 50 S650/T3000 Wireless

* super-power digital instrument communications management technology that improves battery life of up to 1 to 2 years .

2. Main technical parameter and function

1, A, pressure measuring range: gauge pressure:-100kPa ~ 0 ~ 1kPa ~ 260MPa

pressure: 0 ~ 500Pa ~ 3.5MPa absolute pressure: 0 ~ 10kPa ~ 60MPa

B, overload pressure: 1.5 to 3 times the range, depending on the range may be

C, accuracy: 0.1 and below

2, A, temperature measuring range: Thermocouple: E: 0 ~ 750 ℃ K: 0 ~ 1200 ℃ S: 0 ~ 1300 ℃ B: 0 ~ 1600 ℃ heat resistance: PT100: -200 ~ 500 ℃

B, insertion depth: 50mm ~ 2500mm (according to customer demand)

C, accuracy: 0.2 and below

3. Output signal: ACI wireless signal

4. Accuracy class: 0.1 and below

5. Working frequency: 430 ~ 470MHz

6. Transmission distance: 300 meters or 800 meters

7. Built-in power supply: 3.6V high-energy lithium battery

8 Medium temperature: -40 ℃ ~ 85 ℃; -65 ℃ ~ 200 ℃ (Wide Temperature) 9. Working Environment: Temperature: -30 ℃ ~ 60 ℃; humidity: <90% of the reference temperature: 20 ℃ ± 2 ℃

10.Explosion levels: ExdIIBT4

11. Process interface: M20 × 1.5 (male) Third,

3. Structure diagram

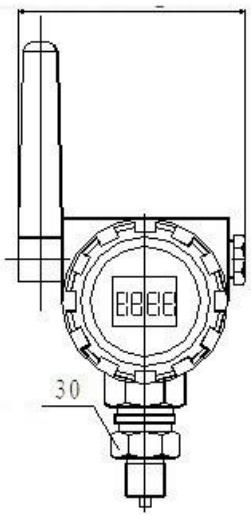

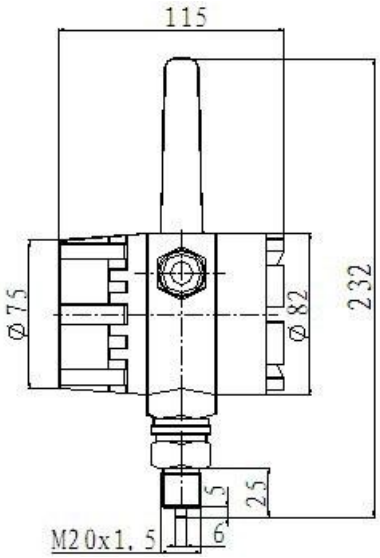

Front view pressure meter side view of

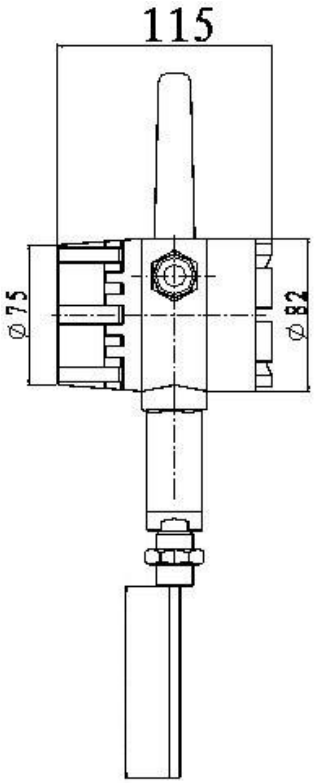

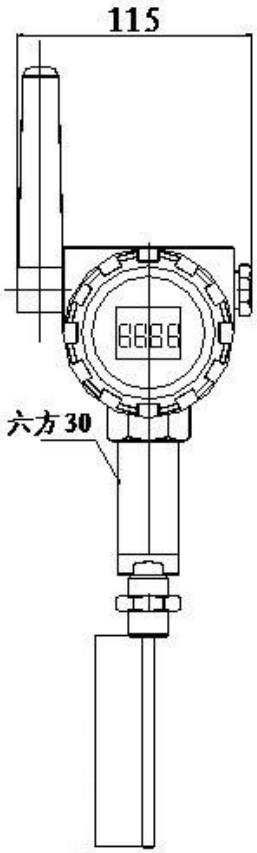

Front view pressure meter side view of

4. Using the method of operation

4.1 Instrument schematic diagram

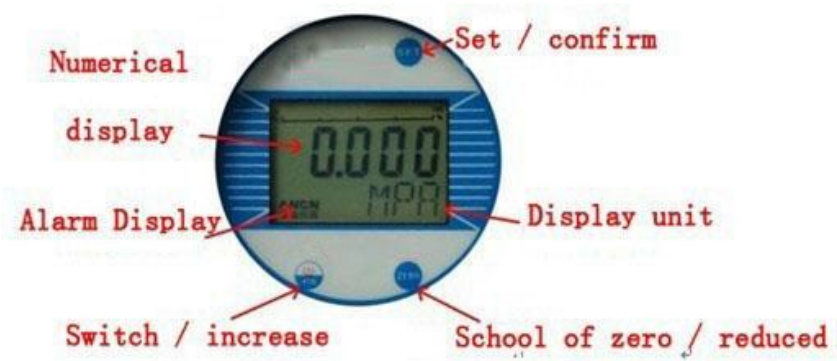

4.2 meter schematic key Features:

4.2.1 test mode function : "switch (ADD)" key: a switch in the detection of the state machine function.

Press and hold to within 1s show "OFF", the meter enters shutdown state;

Press this key to display "- ON-", instrument display communication address, automatically measuring the state.

"Zero (ZERO)" key: zero correction key, zero drift occurs when the instrument through this key automatically when the correct zero. Press and hold to within 1s show "-OO-" instrument to perform a zero calibration; gauge fix: 1s normal exit and automatically save the current pressure to atmospheric pressure and displays "0.00";

if the pressure and atmospheric pressure difference between the large or instrument failure shows the "ERR0",

then save and give into pressure measurement within the 1s state.

Note: The absolute pressure absolute vacuum tables need to be valid under zero.

Thermometer fix: normal 1s automatically exit and save the current temperature is zero and shows "0.00";

If the meter shows a larger temperature difference between the T3000ual temperature is displayed when the instrument failure or "ERR0", and then give up the save and 1s into the temperature measurement within the state.

Note: zero instrument function must be zero (ice water) state zero to be valid.

4.2.2 set the state function: "set (SET)" button: Press 1 second instrument into the set state. Press to set the state has to recognize the preservation of function;

"switch (ADD)" key: the state and set the password, the key has the added functionality of data;

"zero (ZERO)" key: Set the state and enter a password , press the button will display right with zeros at the end.

4.3 meter setting operation method: (Note: Non-professional instrument operator may set operations, so as not to cause errors in instrument operation)

4.3.1 associated with the acquisition speed setting: 1 to enter the collection interval settings (password is usually: "1200 ")

a. Click" settings "button, the meter displays"-KEY-"

b. Press the" switch "button once (plus 1), display" 0001 ", then" zero "button to the left one, this when the show: "0010"

c. with step b, the show "1200"

d. Click "settings" button, set the instrument into the acquisition time is

Set as follows:

1: The instrument displays "SPED" at this time to set up the capture speed, press "switch" button is (0-20) to increase circulation, shown as N seconds / second.

2: After setting press "SET" key instrument displays "ANCN", after the show "55", this parameter does not change,

3: Press the "Settings" button to save and enter the measurement mode.

4.3.2 and communications-related settings:

1. Into the communication parameter settings (password is usually: **"0485"**)

a. Click **"settings"** button, the meter displays **"-KEY-"**

b. Press the **"switch"** key four times to display **"0004"**, then "zero" button to the left one, then display: **"0040"**

c. with step b, the show **"0485"**

d. Click **"settings"** button, set the meter to enter the communications mode

Set as follows:

1: instrument displays **"BPS"**: at this time to set up the communication baud rate, press the **"switch"** selects the baud rate is displayed; can choose the parameters are: 19200 **(default)**, 9600,4800,2400

2: instrument display: "Addr": at this time to set up the address, press the "switch" button to display the address of the communication; address from 00 to 49 **(default is 1)**, the same

receiver to connect up to 50 terminals in wireless instrument and use the same baud rate.

3: Set it and press the **"Settings"** button to save and enter the measurement mode.

4.3.3 The coefficient of proportion and measurement media-related settings: (measurement level applicable)

1 into the coefficient measuring the proportion of medium settings (password is usually: **"1250"**)

a. Click **"settings"** button, the meter displays **"-KEY - "**

b. Press the**" switch "**button once (plus 1), display**" 0001 "**, then**" zero "**button to the left one, then display**:" 0010 "**

c. with step b, the show**"1250 "**

d. Click**" settings "**button, the instrument into the media set the proportion of the coefficient .

Set as follows:

1: The instrument displays**" COEF "**after the show,**" 1.000 "**, this parameter is the coefficient of the proportion of water.

2: Press the **"switch"** button to increase, **"zero"** button decrease until the required proportion of the value for the stop can be.

3: set up, press the **"Settings"** button to save and enter the measurement mode.

5. use the Notes

5.1 **Check before installation**

Pressure: a. Whether the pressure measured point more than the instrument measurement range;

b. Point whether the pressure measured instantaneous shock;

c. Media is measured with high-temperature (less than 85 ℃);

d. The measured media is compatible with the instrument of structural materials;

e. The media will plug the meter measuring the impulse hole;

f. Measuring liquid level tank is sealed.

Temperature: a. Measured point temperature will exceed the instrument's range;

b. The measured media is compatible with the instrument of structural materials;

5.2 Method of installation:

Pressure: a.Under normal circumstances, the instrument should be installed perpendicular to the horizontal direction, so that observation;

b. Universal Standard pressure port M20x1.5 external thread, the installation should be installed such as copper or PTFE gaskets to seal;

c. If the measured level of the tank is sealed, it should be open in the top of the tank vent to prevent compressed gas tank caused by the body and the T3000ual level meter reading does not match, such as related to safety or other areas that are not open vent, it should be the new selection otherwise the level meter.

d. Instrument can be installed directly in the measurement pipe flange interface, for ease of installation and maintenance, and pipe flange joint connection should be installed between the valve and vent valve. (See below)

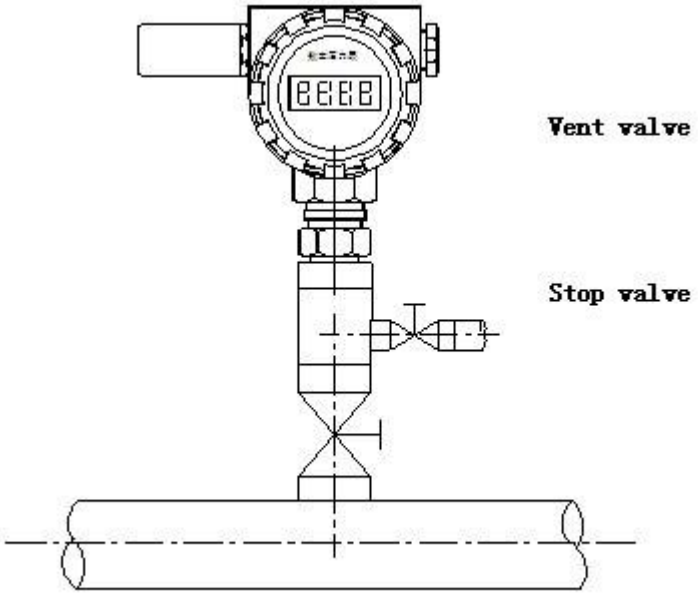

Pipeline installation

temperature: a. Under normal circumstances, the instrument should be installed perpendicular to the horizontal direction, so that observation;

b. Common interface standard temperature M20x1.5 external thread, the installation should be such as to install copper or PTFE gasket sealed;

c. Instrument can be installed directly on the interface in the measurement pipe for easy installation and maintenance, the pipeline should be installed to protect the casing, the proposed temperature sensor should be installed to test the body center. (See below)

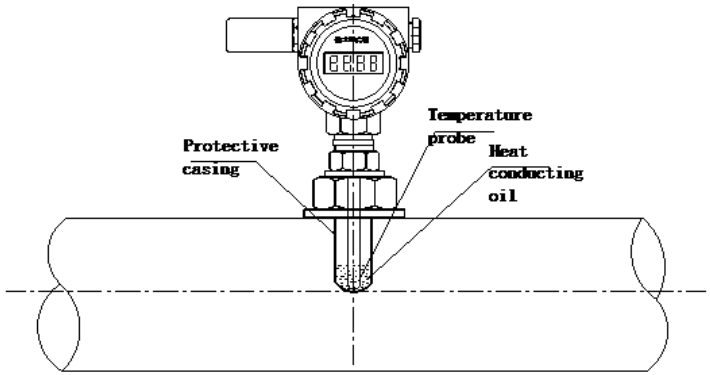

Pipeline installation

5.3 Matters needing attention

sure: a. Do not use sharp or hard objects poke holes impulse, do not press the diaphragm by hand, etc., so as not to touch the film or damage caused by permanent deformation of the diaphragm.

b. For an instant impT3000 on the measured point pressure of the pressure of the buffer device should be installed in order to avoid a direct impT3000 on transient voltage pulse pressure sensor, resulting in sensor damage.

c. When the ambient temperature exceeds product standards should be taken on-site protective measures to prevent damage to the LCD.

d. When installing the instrument, the need to cut-off valve closed, and open the vent valve, so as not to hold back pressure because the pressure caused by excessive damage to the instrument's sensors.

e. If the medium temperature ≥ 80 ℃ ≤ 100 ℃, the suspect should be the installation of the cold pipe.

f. Install differential pressure gauge, note the high-voltage side and low side, so as not to damage the sensor.

Temperature: a. Do not hit with a hard object temperature sensor probe, the temperature sensor to avoid damage to intense vibration.

b. When the ambient temperature exceeds product standards should be taken on-site protective measures to prevent damage to the LCD.

6. Troubleshooting

A, wireless pressure instrumentation Troubleshooting:

Symptom	Causes	Solution
When the instrument air compressor Display is not zero	Installation location has changed, that is, non-axial vertical up installations.	Was installed according to the zero position of the instrument
	Measuring media clogged pore pressure measurement	Clean water or other organic solvents
	Measurement medium and the ambient temperature outside the product range	Prevent the use of the instrument Work outside the temperature range
	Measurement medium containing hard debris damage measuring diaphragm, Measuring diaphragm or man stabbed	Repaired
	Pressure-phenomenon occurs during the installation process, resulting in pressure on the diaphragm deformation	If you can not be returned for repair correction
	Instrument zero drift	Operation of zero for the school
When there is pressure LL ,HH , zero Or instrument display Incorrect pressure	Measuring media clogged pore pressure measurement	Clean water or other organic solvents
	Measurement medium containing hard debris damage measuring diaphragm, Measuring diaphragm or man stabbed	Repaired
	Stressors have instantaneous impT3000	Installation of pressure dampers
	Source of pressure shocks led to transient damage to the pressure sensor	Repaired

	Pressure range beyond the range of the instrument	To prevent the pressure range beyond the range of the instrument Or re-use the appropriate range of instruments
	Pressure exceeds the maximum range of the instrument Overvoltage damage resulting pressure sensor	Repaired
	Excessive electromagnetic interference	Installed in a small environment, electromagnetic interference
No display	Battery power	Replace the same model batteries
	LCD screen damaged	Depot Repair
Instrument does not Communication	Instrument communication parameter setting error	Reference manual5 . 3 .2Chapters properly set the communication parameters
	Meter communication module failure	Repaired
	Battery meter	Replace the same model batteries
	Meter communication distance exceeds the distance or too many obstacles	Will be installed in the instrument within the limits prescribed
	Meter antenna failure	Depot Repair

B . wireless temperature meter Troubleshooting:

Symptom	Causes	Solution
Room temperature shows LL , HH, or instrument display Incorrect temperature	Calibration temperature sensor is damaged or	Repaired
	Excessive electromagnetic interference	Installed in a small environment, electromagnetic interference
No display	Battery power	Depot replacement

		battery
	LCD screen damaged	Depot Repair
Instrument does not Communication	Instrument communication parameter setting error	Reference manual5 . 3 .2Chapters properly set the communication parameters
	Meter communication module failure	Repaired
	Battery meter	Replace the same model batteries
	Meter communication distance exceeds the distance or too many obstacles	Will be installed in the instrument within the limits prescribed
	Meter antenna failure	Depot Repair

7. transportation and storage

1. The product with the certificate, manual, with inspection reports and other accessories installed in a carton, in the process of handling and transportation should be handled with care, non-strong collision.

2. The product should be stored at - 40 ℃ ~ +80 ℃, relative humidity less than 85%, ventilation, dry, non-corrosive gas warehouse.

8. technical services

a. the quality of the product itself, so that when digital pressure gauge does not work, my company is responsible for repair or replacement within a year.

b. To ensure that users of the repair and maintenance, the company paid to provide users with a variety of accessories and digital pressure gauge to upgrade hardware and software services.

9. Ordering Information

a. When ordering, users need to provide detailed technical parameters, such as pressure range, precision, output signal types and special requirements, etc., in order to choose their own requirements more appropriate digital instrument.

b. Selection of methods available on the Company detailed the latest selection of samples or visit the company Web site selection.

10.check out of the box

Timely receipt of product, and for inspections of the project are: the external packaging is complete, according to the packing list supplied with the number

of items check box, instrument type, size, and random accessories, check the integrity of instruments and accessories. After receiving the product if found any unusual or bad, please notify in writing within 3 days of the company, which we will give a replacement or replacement, obsolete items will be issued as a qualified and correct

wireless communication terminal

1. Overview

WX1000 wireless sensor network is our own research and development of wireless sensor network system can completely

replace the traditional instrumentation data acquisition system. The system consists of T3000 wireless communication terminal and ACD-Z, ACT-Z series wireless digital pressure gauge, temperature meter components; completely free ISM band used for data transmission, instrumentation own battery, and does not require any connection between the communication terminal . And IPC communication terminal using RS485 or RS232 connection, using the standard MODBUS-RTU communication protocol, to support configuration Wang, Intouch, FIX and other industrial control software; with Siemens, Schneider, ABB and many other well-known brands of equipment and data communication systems; currently achieved in the 300 meters or 800 within a 50 meter radius of the stability of the wireless instrument collection.

The wireless sensor network application prospects are very bright, has been widely used in military, industrial control, medical and health, environmental monitoring, smart home, building state testing and other areas.

Main features:

* The use of wireless transmission, no on-site wiring, eliminating the need for field wiring common transmitter of trouble, saving manpower, and cost savings;
* Wireless sensor networks with large-capacity high-performance instrument lithium battery-powered, no power supply, is particularly suitable for field use can not provide power;
* Wireless sensors in a number of instruments within the scope of any extension, easy to adjust;
* Acquisition of high precision, stable transmission, a small amount of network maintenance;
* Star bus topology, independently of each other between the sensor, easy maintenance;
* The wireless communication terminals and digital meters are designed to take lightning and explosion-proof, so for

a variety of adverse weather conditions and natural gas gathering station for data acquisition and communication;

2 Main technical parameters

Working frequency: 315MHz ~ 2.4GHz, GFSK FM

Transmit Power: 10 DBM

Communication Interface: RS232, RS485 (MODBUS-RTU), TCP / IP, etc.

Signal output: Optional 2-way isolated 4-20mA or 1-5V output (24v power supply required)

Communication speed: 1200,2400,4800,9600,19200 etc.

Input Power: 7 ~ 24VDC

Power: <3W

Working Environment: Temperature: -30 ℃ ~ 60 ℃; humidity: <90%

3 the electrical wiring diagram and set

RTU internal wiring diagram: Please strictly follow the icon connection.

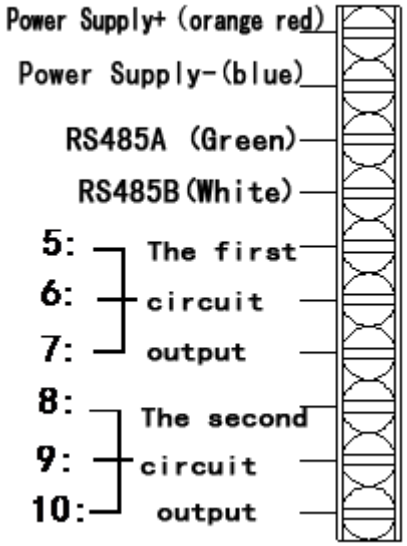

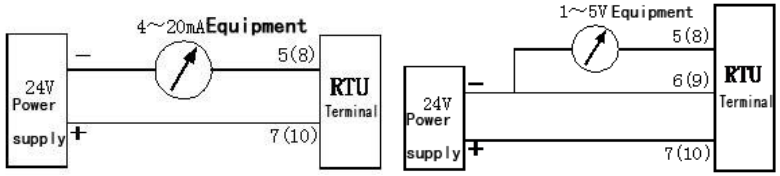

Current output wiring diagram Voltage output wiring diagram

2 feet for the RTU power supply (24VDC) 3,4 feet RTU communication interface (RS485)

Two-wire 4 ~ 20mA current output: the first 5 feet of road 4 ~ 20mA output, 6-foot empty, 7 feet for the 24V power supply is

The second way is 7 feet 4 ~ 20mA output, 8 feet of space, 9 feet for the 24V power supply is

Three-wire 1 ~ 5V voltage output: the first 5 feet of road 1 ~ 5V output, 6 pin 24V power supply negative

7 feet for the 24V power supply is

Second, 8 feet 1 ~ 5V output, 9-pin 24V power supply for the negative

10 feet for the 24V power supply is

Note: 4 ~ 20mA current output or 1 ~ 5V voltage output is only an optional one, and for customized products, to be made in the selection

RTU address settings: (default is 1, only 00,000,001, as shown below)

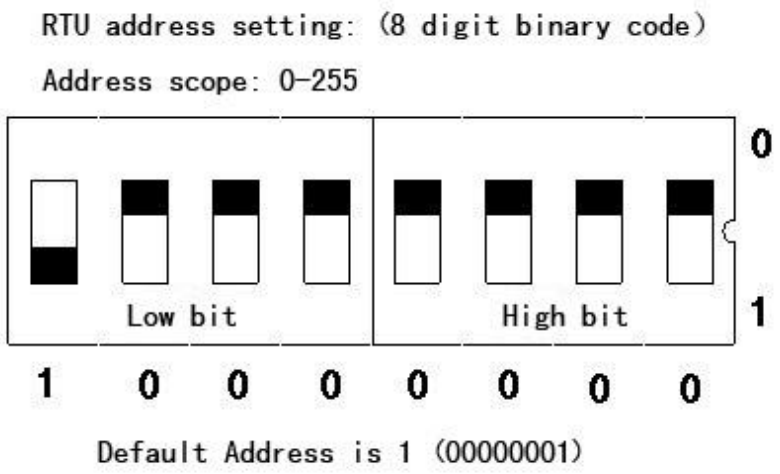

Note: RTU address setting using 8-bit binary code, the address range of 0 to 255, DIP switch 1 to the top, bottom is 0, the first four for the low, the latter four as high, such as: is to RTU address is set to 3, converted to 8-bit binary code: 0000 0011, you will need to lower the first two DIP switch to the top, the rest can be allocated to the bottom.

RTU Baud rate settings: (default is 9600bps, both 10, as shown below)

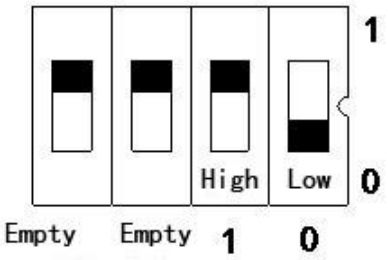

Note: RTU baud rate settings using two binary code, there are two unused empty, you can set the baud rate and the binary code: 2400bps (00), 4800bps (01), 9600bps (10), 19200bps (11), DIP switch 1 to the top, bottom is 0, the first one as high as after a low, such as: RTU is to set the baud rate 4800bps, converted to 2-bit binary code: 01, you will need high level of DIP switch to the bottom, low DIP switches to the top of the can.

Note: No special circumstances, RTU settings at default!

4 The communication protocol

1 , Introduction to Modbus protocol

ModBus protocol defines the use of a controller can recognize the message structure, and whether they are by

What kind of network communications, it has developed a pattern of domain common format and content, describes a control

Controller requests access to other equipment in response to requests from other devices, and how to detect and record Error message.

Through this agreement, between the controller, the controller via the network (eg Ethernet) and other equipment You can complete the information and data between the exchange and transfer, so that a variety of different companies and manufacturers of programmable program

Controller (PLC), RTU, SCADA systems, DCS, or compatible third-party ModBus Protocol

Devices can be connected into industrial networks, to build complex control systems, and conducive to the maintenance and expansion of the system

Show that this protocol has been widely at home and abroad as the power industry and industrial control systems integration industry, a common

Industry standard protocols.

WX1000 Series RTU ModBus-RTU communication protocol used to support the configuration of the king, Intouch, FIX, synall and other popular software, with AB, Siemens, Schneider, GE and many other international brands of equipment

And data communication systems for petroleum, chemical, electric power system automation, intelligent instrumentation

Equipment, industrial automation and other fields, is to build, expand industrial DCS system, data acquisition or manufacture of intelligent design

Ideal equipment features.

2 , WX1000-RTU protocol

WX1000 Series Modbus RTU communication protocol to achieve, follow the Modbus communication process, using the MODBUS-RTU protocol subset of commands, using the read register command (03).

① Data transmission:

Asynchronous 10 - 1 start bit, 8 data bits, 1 stop bit, no parity.

② data transfer rate:

19200bps, 9600 bps, 4800bps, 2400bps. (The default baud rate is 9600bps, households can be set using special software.)

③ Address:

0 ~ 255 (default is 1, the user can be set using special software).

④ host request data packet format:

Host sends	Bytes	Send message	Remarks
RTU Address	1	XX	To address XX Slave

			(RTU) to the data
Function Code	1	03	Read register
Start Address	2	0000	Starting at address 0000
Read data length	2	00XX	XX data (total 2XX bytes)
CRC code	2	XXXX	CRC code calculated by the host

1 RTU to host the actual request data packet as follows:

01H, 03H, 00H, 00H, 00H, 32H, C4H, 1FH

⑤ WX1000-RTU response to the number of command message format:

Slave response	Bytes	Returns information	Remarks
Slave Address	1	XX	From the slave address XX
Function Code	1	03	Read register
Data length	1	XX	XX bytes (2 times the number of data)
Register data 1	2	DAT1	1 meter data content
... ...			
Register data N	2	DATN	N number of meter data content
CRC code	2	XXXX	Calculated by the CRC code from the machine

Communication to explain the data area returned

0x0000: 1 meter high byte Road

0x0001: 1 meter low byte Road

0x0002: 2 way meter high byte

0x0003: 2 way meter low byte

... ...

0x0062: 50 meter high byte Road

0x0063: 50 meter low byte Road

Other Address: instrument does not return

Error code explanation:

1: Returns: 7DH, 00H (32000) meter over-range limit.

2: Return: D6H, 98H (-10600) meter over-range limit.

3: Return: D5H, 08H (-11000) instrument failure, but the communication flow.

4: Return: D1H, 20H (-12000) no such instrument or communication interruption road.

⑥ error check (CRC check):

CRC code calculation steps are:

* Pre-register for the 16-bit hexadecimal FFFF (ie all 1s). Call this register is the CRC register;

* The first 8-bit data and 16-bit CRC register differences or low, the results placed in the CRC register;

* To register right by one (towards low), using 0 to fill the highest position, check the lowest;

If the lowest bit is 0: Repeat Step 3 (again, shift); If the lowest bit is 1: CRC register with the polynomial A001 (1010 0000 0000 0001) XOR;

• Repeat steps 3 and 4, until the right 8 times, so that all of the 8-bit data were processed;

• Repeat steps 2 through 5, the next 8-bit data processing;

• Finally, get the CRC register is the CRC

5 Transportation and storage

1. The product with the certificate, manual, with inspection reports and other accessories installed in a carton, in the process of handling and transportation should be handled with care, non-strong collision.

2. The product should be stored at - 40 ℃ ~ +80 ℃, relative humidity less than 85%, ventilation, dry, non-corrosive gas warehouse.

6 Technical services

a. the quality of the product itself, the product does not work, my company is responsible for repair or replacement within a year.

b. To ensure that users of the repair and maintenance, our company paid to provide users with a variety of accessories and products, hardware and software upgrades.

7 Ordering Information

a. When ordering, users need to provide detailed technical parameters required to select a more appropriate number of their instruments.

b. Selection of methods available on the Company detailed the latest selection of samples or visit the company Web site selection.

8 The open-package inspection

Timely receipt of product, and for inspections of the project are: the external packaging is complete, according to a random check box with the packing list number of items, product models, specifications and random accessories, check the integrity of products and accessories.

After receiving the product if found any unusual or bad, please notify in writing within 3 days of the company, which we will give a replacement or replacement, obsolete items will be issued as a qualified correctly.